Tank Assembly 200 lb, ROF

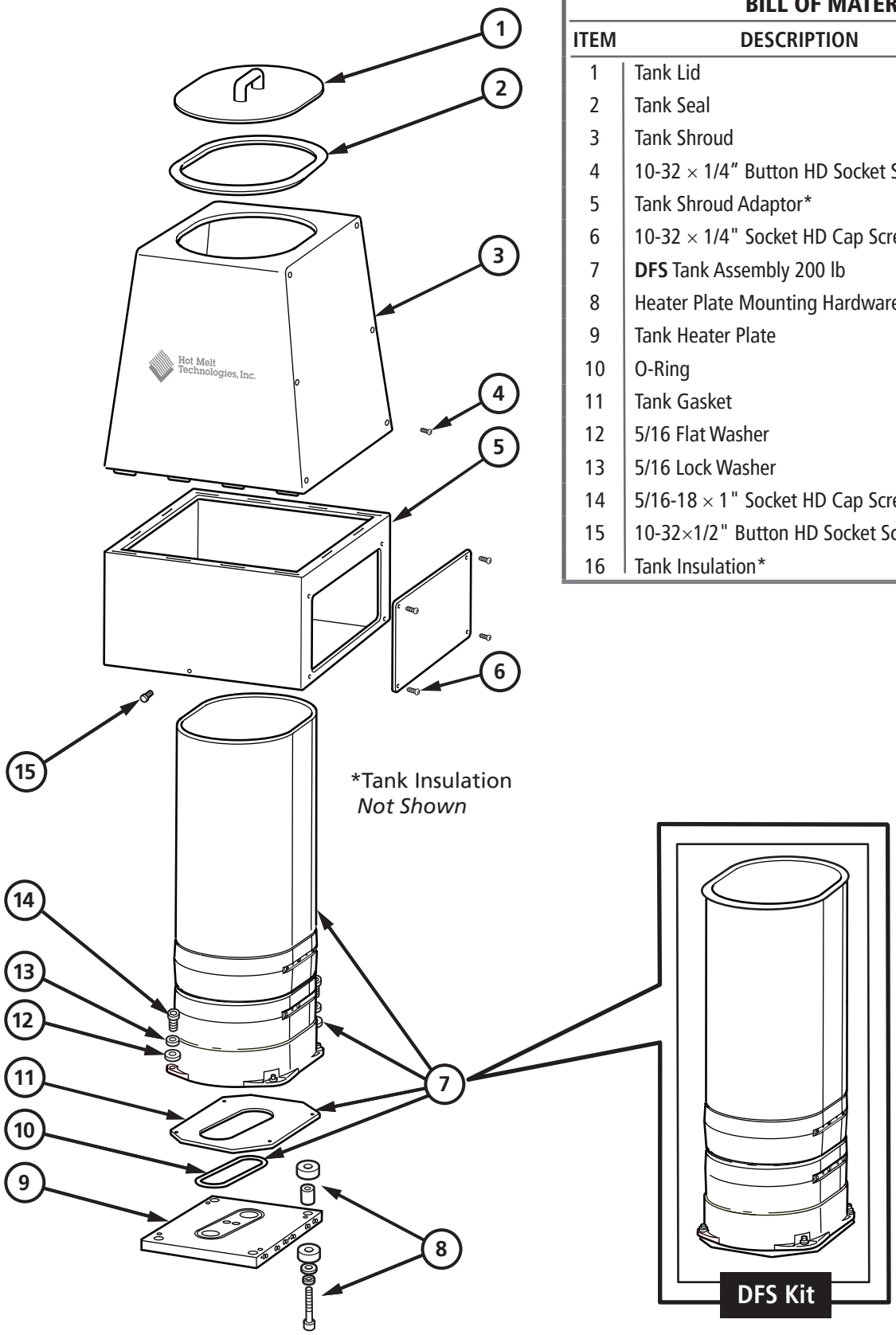

BILL OF MATERIALS

ITEM	DESCRIPTION	PART NO	QTY
1	Tank Lid	911-005	1
2	Tank Seal	510-135	1
3	Tank Shroud	911-029	1
4	10-32 × 1/4" Button HD Socket Screw	324-084	16
5	Tank Shroud Adaptor*	345-200	1
6	10-32 × 1/4" Socket HD Cap Screw*	322-058	4
7	**DFS** Tank Assembly 200 lb	911-202	1
8	Heater Plate Mounting Hardware	911-060	1
9	Tank Heater Plate	110-024	1
10	O-Ring	520-033	1
11	Tank Gasket	510-026	1
12	5/16 Flat Washer	315-008	4
13	5/16 Lock Washer	316-008	4
14	5/16-18 × 1" Socket HD Cap Screw	322-161	4
15	10-32×1/2" Button HD Socket Screw	324-084	2
16	Tank Insulation*	450-003	1

©2022 Hot Melt Technologies, Inc