Tank Assembly 50–85 lb, Serviceable

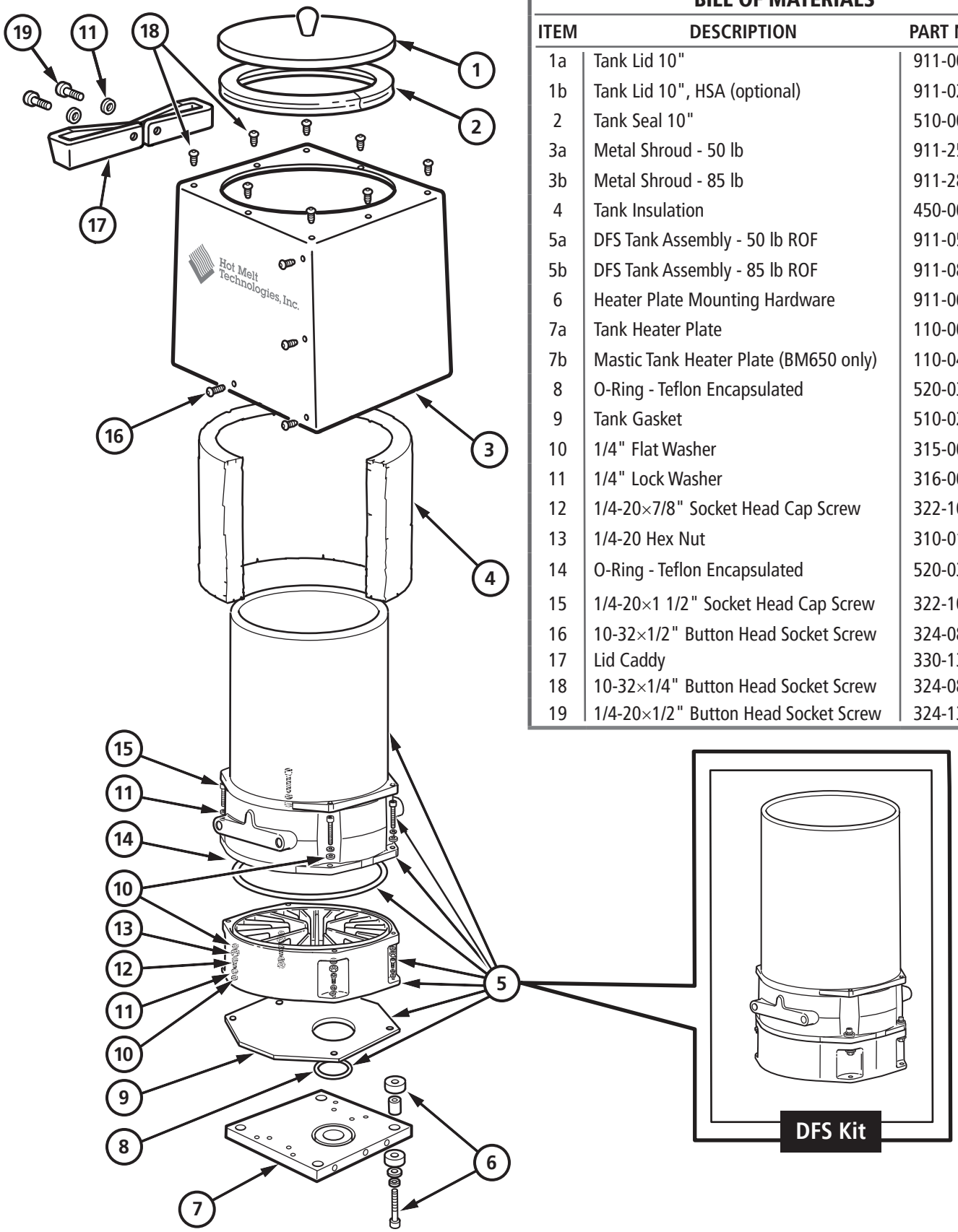

BILL OF MATERIALS

ITEM	DESCRIPTION	PART NO	QTY
1a	Tank Lid 10"	911-002	1
1b	Tank Lid 10", HSA (optional)	911-023	1
2	Tank Seal 10"	510-001	1
3a	Metal Shroud - 50 lb	911-250	1
3b	Metal Shroud - 85 lb	911-285	1
4	Tank Insulation	450-003	1
5a	DFS Tank Assembly - 50 lb ROF	911-053	1
5b	DFS Tank Assembly - 85 lb ROF	911-086	1
6	Heater Plate Mounting Hardware	911-060	1
7a	Tank Heater Plate	110-007	1
7b	Mastic Tank Heater Plate (BM650 only)	110-044	1
8	O-Ring - Teflon Encapsulated	520-031	1
9	Tank Gasket	510-025	1
10	1/4" Flat Washer	315-007	12
11	1/4" Lock Washer	316-007	10
12	1/4-20×7/8" Socket Head Cap Screw	322-104	4
13	1/4-20 Hex Nut	310-019	4
14	O-Ring - Teflon Encapsulated	520-032	1
15	1/4-20×1 1/2" Socket Head Cap Screw	322-107	4
16	10-32×1/2" Button Head Socket Screw	324-086	2
17	Lid Caddy	330-135	1
18	10-32×1/4" Button Head Socket Screw	324-084	14
19	1/4-20×1/2" Button Head Socket Screw	324-137	2

©2023 Hot Melt Technologies, Inc