Tank Assembly 200 lb, ROF

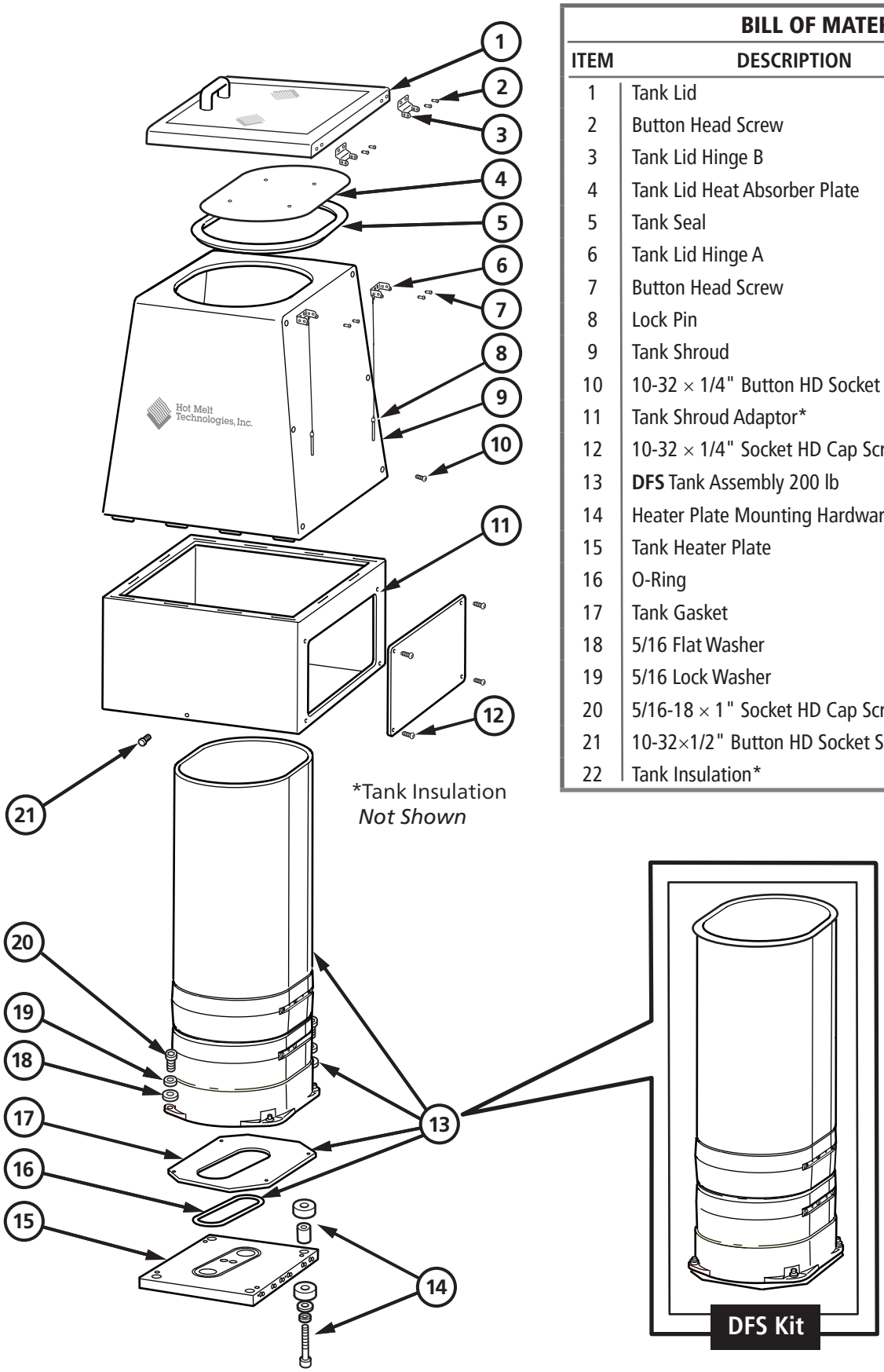

BILL OF MATERIALS

ITEM	DESCRIPTION	PART NO	QTY
1	Tank Lid	911-300	1
2	Button Head Screw	322-102	4
3	Tank Lid Hinge B	345-304	2
4	Tank Lid Heat Absorber Plate	345-302	16
5	Tank Seal	510-135	1
6	Tank Lid Hinge A	345-303	2
7	Button Head Screw	324-137	4
8	Lock Pin	300-303	2
9	Tank Shroud	345-056	1
10	10-32 × 1/4" Button HD Socket Screw	324-084	16
11	Tank Shroud Adaptor*	345-200	1
12	10-32 × 1/4" Socket HD Cap Screw*	322-058	4
13	**DFS** Tank Assembly 200 lb	911-202	1
14	Heater Plate Mounting Hardware	911-060	1
15	Tank Heater Plate	110-024	1
16	O-Ring	520-033	1
17	Tank Gasket	510-026	1
18	5/16 Flat Washer	315-008	4
19	5/16 Lock Washer	316-008	4
20	5/16-18 × 1" Socket HD Cap Screw	322-161	4
21	10-32×1/2" Button HD Socket Screw	324-084	2
22	Tank Insulation*	450-003	1

*200 lb Tank Only

©2025 Hot Melt Technologies, Inc